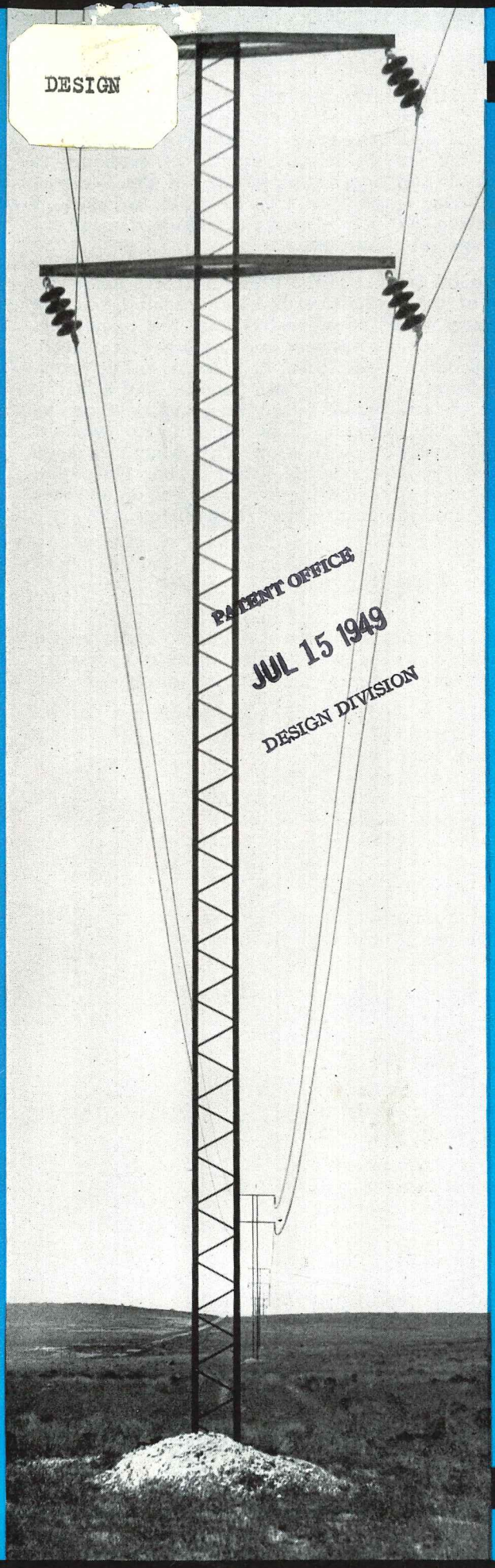

DESIGN

PATENT OFFICE
JUL 15 1949
DESIGN DIVISION

RETURN TO
DESIGN DIV.

TRUSCON

P.3

WELTRUS STEEL POLES

LIBRARY
MAY 23 1949
U S PATENT OFFICE

PATENT OFFICE
JUL 15 1949
DESIGN DIVISION

No. N-60
JULY, 1947

RETURN TO
DESIGN DIV.

TRUSCON STEEL COMPANY
YOUNGSTOWN 1, OHIO
Subsidiary of Republic Steel Corporation

TRUSCON WELTRUS STEEL POLES

THE TRUSCON WELTRUS Steel Pole is composed of two Copper-Alloy cold rolled channel chord members, connected by a continuous lattice web of solid round form.

All connections are autogenously welded electrically. Automatic machinery accurately regulates the time, current flow, and pressure uniformity of each weld.

The resulting one-piece Warren truss acts as a homogeneous member, with no initial slip at joints as with bolted connections, and deflections under load are therefore uniform and in almost exact accord with theoretical considerations.

Steel poles function as simple centilevers with relatively small column loads and are subject to abnormal emergency stresses. Inherent stability of the Weltrus Steel Pole is attained by favorable ratios of slenderness of the pole as a whole and of its integral parts.

The sections are specially designed to insure efficient distribution of metal. By utilizing chord members of different gauge in top and bottom portions of the pole, a unique degree of economy is achieved. In addition, the flexibility of the Weltrus manufacturing processes affords wide latitude in the selection and arrangement of standard members to meet special conditions.

A valuable feature of the Weltrus Steel Pole is the absence of taper, the chords being parallel and the poles therefore of equal width from top to bottom. Attachment of crossarms and fittings is greatly simplified, since gauge lines of holes in either transverse or longitudinal faces are parallel, and a fitting punched for attachment to any standard pole, can be applied at any distance below the pole top without change in detail or fabrication. This benefit extends to field stocks of poles and fittings, and is of equal value whether poles be factory punched or whether fittings are of the adjustable field-connection type.

NATIONAL PATENT OFFICE
JUL 15 1949
DESIGN DIVISION
RETURN TO DESIGN DIV.

Weltrus Steel Pole Fittings

Attachment of fittings is provided by two distinct methods; first, by means of factory punched holes in the poles for direct bolting, and, second, by use of adjustable field connections which do not require that poles be punched.

Direct bolting is most economical when fittings can be located in advance so that the required holes may be punched in the poles at the factory. For guys, or other fittings used only at intervals in the line, all poles are ordinarily punched to avoid spotting specially punched poles at certain locations in the field. A reasonable range of adjustment of fittings is sometimes obtained by means of multiple punching when quantities are sufficiently large to justify the added shop expense of arranging equipment.

When it is desired to attach fittings not originally contemplated (for which no holes have been punched) or fittings subject to variable field conditions of alignment, adjustable field connections should be used. These are designed with clips or clamps which attach the fitting without field drilling of holes.

When cross-arm assembly shows a bayonet, the ground wire clamp at top is included.

Cross-arms for suspension or disc type insulators include necessary "U" bolts for insulator hooks.

Diameters of pin holes to be punched in cross-arms must be specified at time of ordering.

All cross-arm assemblies are furnished galvanized unless otherwise ordered.

Standard finish of bolts is hot dip galvanized whether furnished separately or as part of standard fitting arrangements.

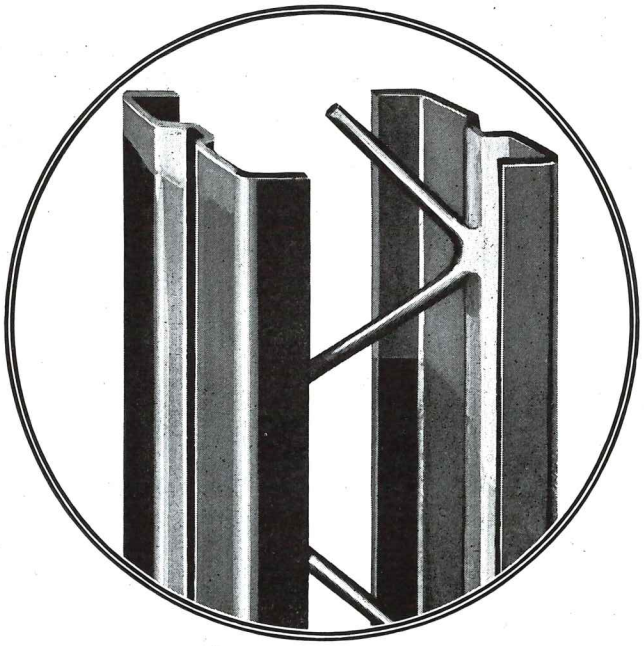

DETAIL SECTION

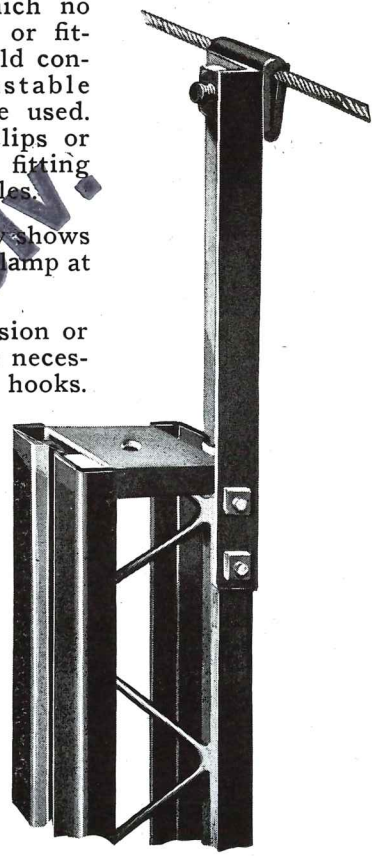

BAYONET
AND CROWN CHANNEL

Anchor Bolt Foundations

PATENT OFFICE
15
DESIGN DIVISION

Poles set on Anchor Bolts are more costly than those set integrally in concrete. Poles to be erected in heavy traffic where pikes or guys cannot be used while concrete hardens, are frequently set on anchor bolt foundations prepared prior to erecting poles. An advantage is that poles can be easily and quickly moved to new locations as service conditions warrant.

When placed on city streets the whole base may be set below sidewalk level, and the walk grouted flush, thus eliminating projections and minimizing obstructions.

The size of foundation required for Anchor Bolt Type Poles depends upon local soil conditions. Anchor bolts can be either shipped in advance or purchased locally so that foundations can be in place prior to arrival in the field of the poles.

Anchor bolt spacings shown in the table are not guaranteed to be correct and it is advisable that anchor bolt plans especially prepared for any specific project be awaited before placing anchor bolts.

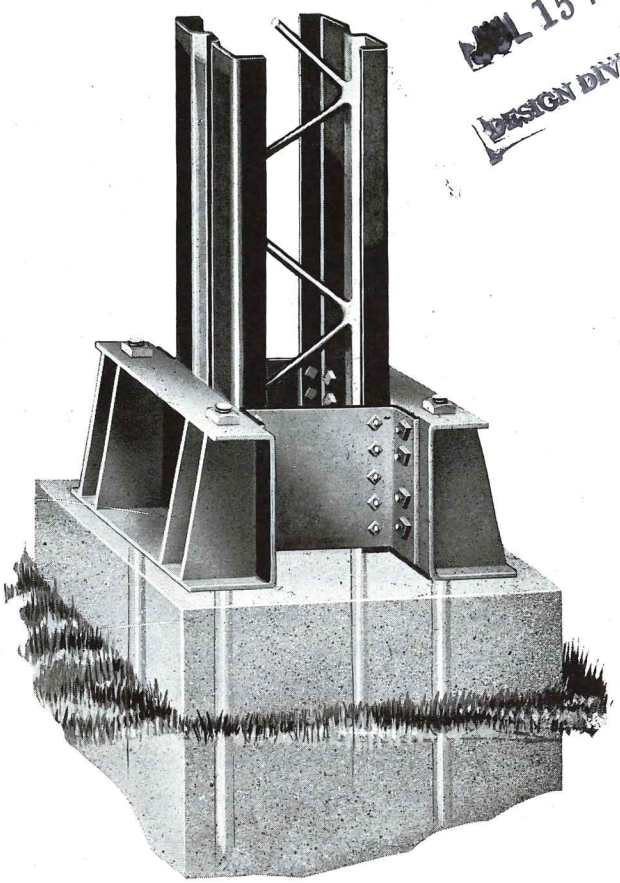

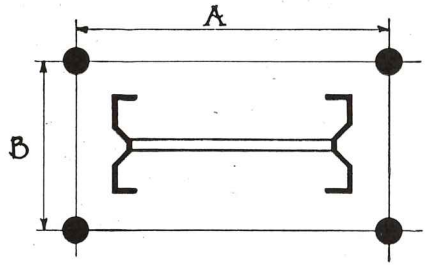

·SINGLE·POLES·

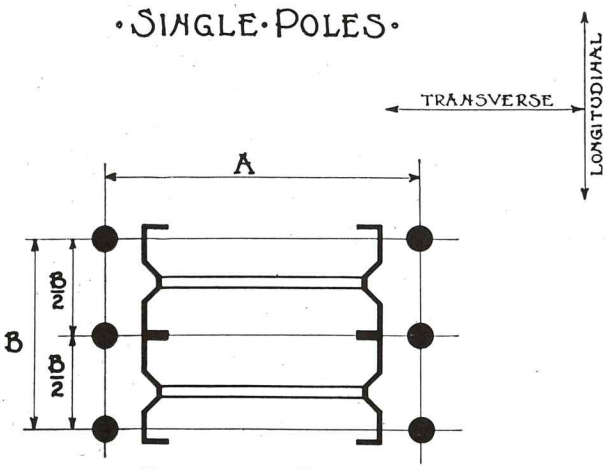

·DOUBLE·POLES·

ANCHOR BOLT TABLE

	Code	Index No.	Type Pole	Diameter and Length	Length of Thread	Proj. above Conc'te	Spacing Transverse A	Spacing Longitudinal B	Wt. per Set
SINGLE POLES 4 PER SET	ABSAF	831	A 8 A12 A16	1"x3'-9' " "	3½" " "	4" " "	9⅜" 13¼" 17⅛"	8" " "	45 " "
	ABSBG	832	B 8 B12 B16	1⅛"x4'-0" " "	" " "	" " "	9⅜" 13¼" 17⅛"	9" " "	62 " "
	ABSCH	833	C 8 C12 C16 C22	1¼"x5'-3 " " "	4" " " "	13¼" " " "	12⅜" 16¼" 20⅛" 26⅜"	9" " " "	98 " " "
	ABSDI	834	D12 D16 D22	1⅜"x6'-0" " "	4½" " "	15½" " "	16¼" 20⅛" 26⅜"	12" " "	136 " "
	ABSEJ	835	E12 E16 E22	1½"x6'-6' " "	4¾" " "	17¾" " "	16¼" 20¼" 26⅜"	14" " "	175 " "
DOUBLE POLES 6 PER SET	ABDKN	836	C16D	1⅜"x6'-0'	4½"	15½"	20⅛"	15"	203
			C22D	"	"	"	26⅜"	"	"
	ABDLO	837	D22D	1½"x6'-6"	4¾"	15¾"	"	21"	263
	ABDMP	838	E22D	1¾"x7'-0"	"	16¼"	"	25"	388

Properties of Weltrus Steel Poles

On this and the following page are tabulated physical characteristics and properties of individual Weltrus sections and of the various poles built up therefrom. With these data may be calculated modifications and combinations for use in special designs. Weltrus sections are manufactured from copper bearing open hearth steel.

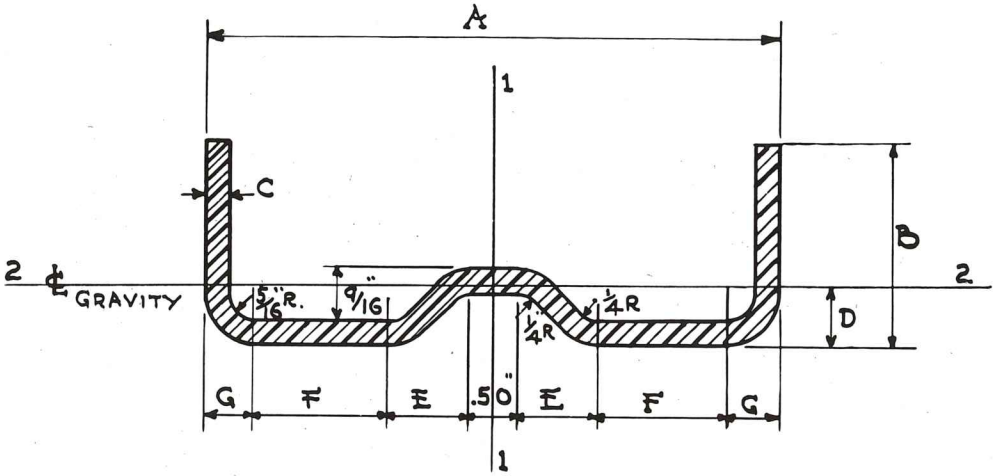

DIMENSIONS—(Inches)

Type	Portion of Pole	Area	Weight Per Foot	C	A	B	D	E	F	G
A	Top	.92	3.13	.141	4	1.51	.53	.79	.48	.48
	Bottom	1.12	3.81	.172						
B	Top	1.23	4.18	.141	5	2.06	.63	.79	.98	.48
	Bottom	1.50	5.10	.172						
C	Top	1.38	4.67	.141	6	2.13	.59	.79	1.46	.50
	Bottom	1.83	6.22	.188						
D	Top	1.80	6.12	.141	9	2.13	.48	.79	2.96	.50
	Bottom	2.40	8.16	.188						
E	Top	2.39	8.13	.156	11	2.38	.49	.80	3.94	.51
	Bottom	3.10	10.6	.203						
F	Top	2.80	9.50	.172	12	2.43	.48	.80	4.41	.54
	Bottom	3.81	12.9	.234						

PROPERTIES

Type	Portion of Pole	AXIS 1-1			AXIS 2-2		
		I in.⁴	Z in.³	r in.	I in.⁴	Z in.³	r in.
A	Top	1.98	.99	1.48	.16	.17	.41
	Bottom	2.42	1.21	1.48	.19	.20	.41
B	Top	4.27	1.71	1.88	.41	.29	.58
	Bottom	5.23	2.09	1.88	.50	.35	.58
C	Top	6.77	2.26	2.21	.50	.32	.59
	Bottom	9.04	3.01	2.21	.66	.43	.59
D	Top	18.3	4.07	3.16	.57	.35	.56
	Bottom	24.4	5.42	3.16	.76	.47	.56
E	Top	36.5	6.62	3.87	.96	.51	.63
	Bottom	47.4	8.61	3.87	1.25	.66	.63
F	Top	50.2	8.30	4.27	1.08	.56	.62
	Bottom	68.4	11.3	4.27	1.47	76	.62

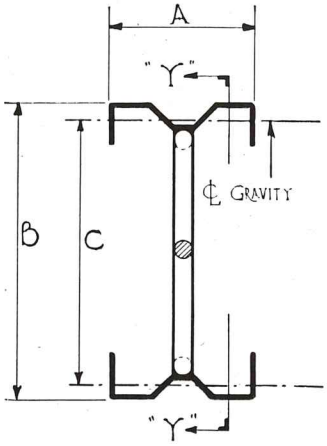

POLE SECTION

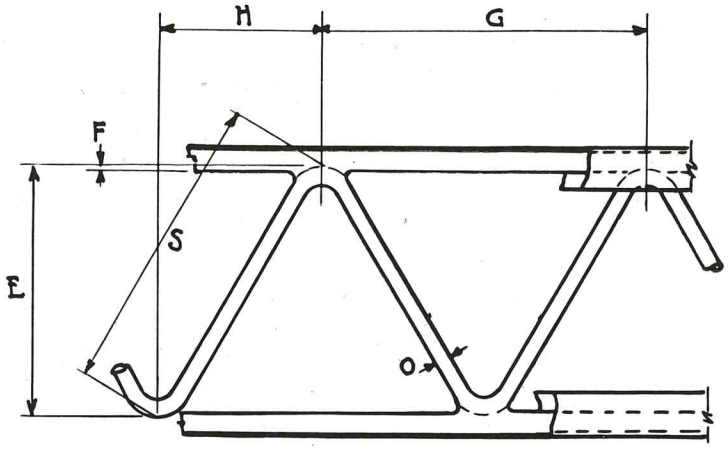

See top page 5

TYPICAL SECTION "Y-Y"

Gray, Res. Div.
5/17/49 - Gft.

WEB CHARACTERISTICS

See bottom page 4

RETURN TO DESIGN DIV.

Nominal Pole Depth "B"	Type Poles	E	F	G	H	Diam.	S	L/R of Web Bar	AVERAGE WELD SHEAR VALUES		Safe Transverse Weld Strength
									Parallel to Chord	Trans-verse	
8"	A,B,C	6 23/32"	3/32"	13 3/8"	6 11/16"	1/2"	9 15/32"	76	7,600	5,400	2,670
12"	A,B,C,D,E	10 7/16"	3/32"	13 3/8"	6 11/16"	1/2"	12 3/8"	99	7,600	6,600	2,700
16"	A,B,C,D,E	14 7/16"	1/8"	18"	9"	5/8"	17"	109	9,000	7,800	3,900
22"	B,C,D,E	20 5/8"	1/8"	25"	12 1/2"	3/4"	24 1/8"	129	10,900	9,400	4,700
22"	F	20 3/4"	1/8"	25"	12 1/2"	13/16"	24 3/32"	119	13,400	11,600	5,800

POLE SECTION CHARACTERISTICS

See bottom page 4

Index	Width A	Depth B	C
A8	4"	7 15/16"	6.90
A12	4"	11 11/16"	10.67
A16	4"	15 5/8"	14.61
B8	5"	7 15/16"	6.70
B12	5"	11 11/16"	10.47
B16	5"	15 5/8"	14.41
B22	5"	21 13/16"	20.60
C8	6"	7 15/16"	6.81

Index	Width A	Depth B	C
C12	6"	11 11/16"	10.60
C16	6"	15 5/8"	14.54
C22	6"	21 13/16"	20.73
D12	9"	11 11/16"	10.80
D16	9"	15 5/8"	14.74
D22	9"	21 13/16"	20.93
E12	11"	11 3/4"	10.84
E16	11"	15 11/16"	14.78
E22	11"	21 7/8"	20.97
F22	12"	22"	21.01

PATENT OFFICE JUL 15 1949 DESIGN DIVISION

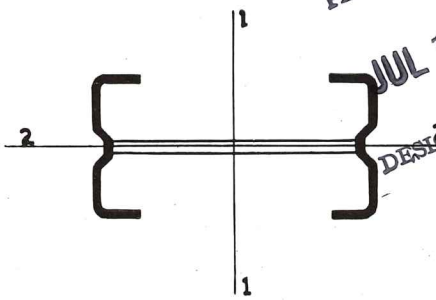

Weltrus Steel Pole Properties At Ground Line

SINGLE POLES

Index	Weight per ft.	Axis 1-1			Axis 2-2		
		I in.⁴	Z in.³	Y See Note	I in.⁴	Z in.³	r in.
A 8	8.55	27.1	6.83	7.73	4.84	2.42	1.48
A12	8.82	64.2	11.0	12.0			
A16	9.57	120.	15.4	16.4			
B 8	11.1	34.7	8.8	10.1	10.5	4.18	1.88
B12	11.4	83.4	14.3	15.7			
B16	12.2	157.	20.1	21.6			
B22	13.0	319.	29.2	30.9			
C 8	13.4	43.9	11.1	12.5	18.1	6.02	2.21
C12	13.7	104.	17.8	19.4			
C16	14.5	195.	24.9	26.6			
C22	15.3	395.	36.2	38.0			
D12	17.5	142.	24.3	26.0	48.8	10.8	3.16
D16	18.3	263.	33.6	35.4			
D22	19.1	528.	48.3	50.2			
E12	22.3	185.	31.5	33.6	94.8	17.2	3.87
E16	23.1	341.	43.5	45.8			
E22	23.9	685.	62.6	65.0			
F22	29.2	844.	76.9	80.1	137.	22.8	4.27

NOTE—Property "Y" about Axes 1-1 is the product of one chord area and the distance between the centers of gravity of the chords. Based on the assumption that the composite section is a truss, factor "Y" is employed in the same manner as a section modulus in the calculation of catalogued transverse strength ratings of Weltrus poles.

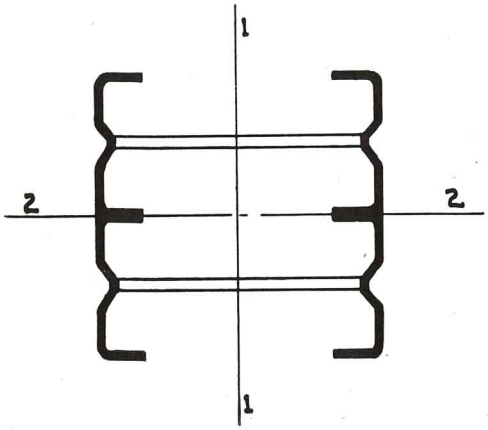

DOUBLE POLES

Index	Weight per ft.	Axis 1-1			Axis 2-2		
		I in.⁴	Z in.³	Y See Note	I in.⁴	Z in.³	r in.
B12D	23.3	167	28.6	31.4	58.5	11.7	3.12
B16D	24.9	314	40.2	43.2			
B22D	26.5	638	58.4	61.8			
C12D	27.9	208	35.6	38.8	102.	17.0	3.73
C16D	29.5	390	49.8	53.2			
C22D	31.1	790	72.4	76.0			
D16D	37.1	526	67.2	70.8	292.	32.4	5.51
D22D	38.7	1,060	96.6	100.			
E22D	48.3	1,370	125.	130.	565.	51.3	6.75
F22D	58.9	1,690	154.	160.	823.	68.6	7.35

TRUSCON WELTRUS STEEL POLES

TRUSCON SALES OFFICES

Albany 7, N. Y., 75 State Street
Atlanta 3, Ga., 610 Rhodes-Haverty Building
Baltimore 11, Md., 330 W. 24th Street
Birmingham 3, Ala., 1234 American Life Building
Boston 27 (South), Mass., 307 Dorchester Avenue
Buffalo 3, N. Y., 1426 Rand Building
Charleston, W. Va., 701 Atlas Building
Chattanooga 1, Tenn., 19th and Grove Streets
Chicago 6, Ill., 201 No. Wells Street
Cincinnati 2, Ohio, 330 Dixie Terminal Building
Cleveland 15, Ohio, 735 Hanna Building Annex
Columbus 15, Ohio, 818 Atlas Building
Dallas 1, Texas, 314 Construction Building
Dayton 2, Ohio, 44 So. Ludlow Street
Denver 2, Colo., 228 Patterson Building
Detroit 26, Mich., 615 Wayne Street
Erie, Pa., 215 Hayes Building
Greensboro, N. C., 935 Jefferson Standard Bldg.
Harrisburg, Pa., 410 N. Second Street
Houston 11, Texas, 501 N. Greenwood Street
Indianapolis 3, Ind., 398 Division Street
Jacksonville 2, Fla., 301 Hildebrandt Building
Kansas City 6, Mo., 1012 Baltimore Ave.
Little Rock, Ark., 812-13 Union Life Building
Los Angeles 54, Cal., P. O. Box 3699 Term. Annex Sta.
Louisville 1, Ky., 1032 S. Eighth Street
Memphis 5, Tenn., 269 Walnut Street
Minneapolis 2, Minn., 246 Baker Building
New Orleans 12, La., 1143 Canal Bank Building
New York 17, N. Y., 155 E. 44th Street
Norfolk 10, Va., 518 Dickson Building
Oklahoma City 2, Okla., 610½ Colcord Drive
Omaha 2, Neb., 806-07 Insurance Building
Philadelphia 3, Pa., 1616 Walnut Street
Phoenix, Ariz., 303 Luhrs Building
Pittsburgh 22, Pa., 2541 Oliver Building
Portland 12, Ore., 2139 N. Kerby Avenue
Pottsville, Pa., 1541 Howard Avenue
Richmond, Va., 122 N. 8th Street
St. Louis 3, Mo., 8th Floor, Shell Building
Salt Lake City 10, Utah, 1526 So. West Temple Street
San Francisco 5, Calif., 604 Mission Street
Seattle 4, Wash., 757 Central Building
Syracuse 2, N. Y., 303 Syracuse-Kemper Insurance Bldg.
Toledo 4, Ohio, 220 Richardson Building
Washington 5, D. C., 700 Investment Building

Youngstown 1, Ohio, 1315 Albert Street
EXPORT DEPT., Chrysler Bldg., 405 Lexington Ave., NEW YORK 17, N. Y.
PRESSED STEEL DIVISION, 6100 Truscon Ave., CLEVELAND 4, OHIO

RETURN TO DESIGN DIV.
PATENT OFFICE
JUL 15 1949
DESIGN DIVISION

TRUSCON WAREHOUSES

BOSTON, MASS.
BUFFALO, N. Y.
CHATTANOOGA, TENN.
CHICAGO, ILL.
CINCINNATI, OHIO
CLEVELAND, OHIO
DENVER, COLO.
DETROIT, MICH.
GADSDEN, ALA.
HARRISON, N. J.
HOUSTON, TEXAS
INDIANAPOLIS, IND.
JACKSONVILLE, FLA.
KANSAS CITY, MO.
LOS ANGELES, CALIF.
PHILADELPHIA, PA.
PITTSBURGH, PA.
PORTLAND, ORE.
ST. LOUIS, MO.
SAN FRANCISCO, CALIF.
YOUNGSTOWN, OHIO

Executive Offices and Main Plant
YOUNGSTOWN 1, OHIO

Subsidiary of Republic Steel Corporation

Factories in: Youngstown, Ohio; Cleveland, Ohio; Canton, Ohio; Gadsden, Ala.; Walkerville, Ont., Canada

N-60—5M 7-47

Printed in U. S. A.